GX6AHB-11 Submittal

The GX series of flow centers operates like and with all the benefits of a non-pressurized flow center with added features, including the ability to operate at pressures up to 100 psig. Designed for use in multiple heat pump geothermal applications, properly installed, the GX is self-regulated, using the minimum power necessary for supplying the optimal flow rate to each running heat pump (regardless of size or proximity to flow center). Using the WILO MAXO Pump the GX captures the benefits of state-of-the-art ECM variable speed pump technology.

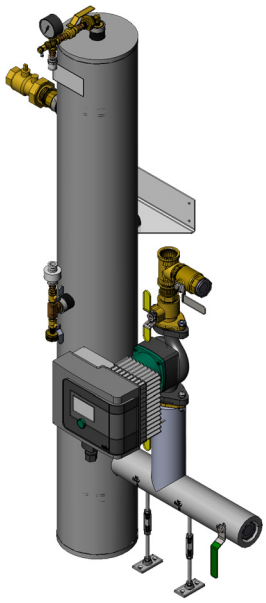

GX6AHB-11

Features:

- Electronically Commutated Motor (ECM) Variable Speed Pump Technology
- Lowest Energy Consumption per Ton of Heat Pump Capacity
- Available in 4 Configurations:
  - Basic - Single Pump
  - Dual - Two Pumps in Parallel (either Full or Partial Redundancy)
  - Primary/Secondary - Two Pumps (Primary for Loop Field & Secondary for Heat Pumps)
  - Dual Primary/Secondary - Four Pumps (Two Primary & Two Secondary)
- Non-Pressurized but capable of being pressurized Flow Center
- Sealed High-Density Polyethylene Insulated Canister
- Air Separation Chamber
- 0-100 psig pressure gauge
- Sight Glass to indicate proper fill level
- FPT Brass or Flanged Inlet & Outlet Connections
- Stabilizing Wall Mounting Bracket
- Purge Ports and hose bib connection for Easy Fill & Maintenance
- GV Zone Monitor (GVZM) Accessory, a cost-effective way to further reduce energy consumption by disabling pump when no heat pumps are running
- Engineering Support for system design
- 3 Year Limited Warranty

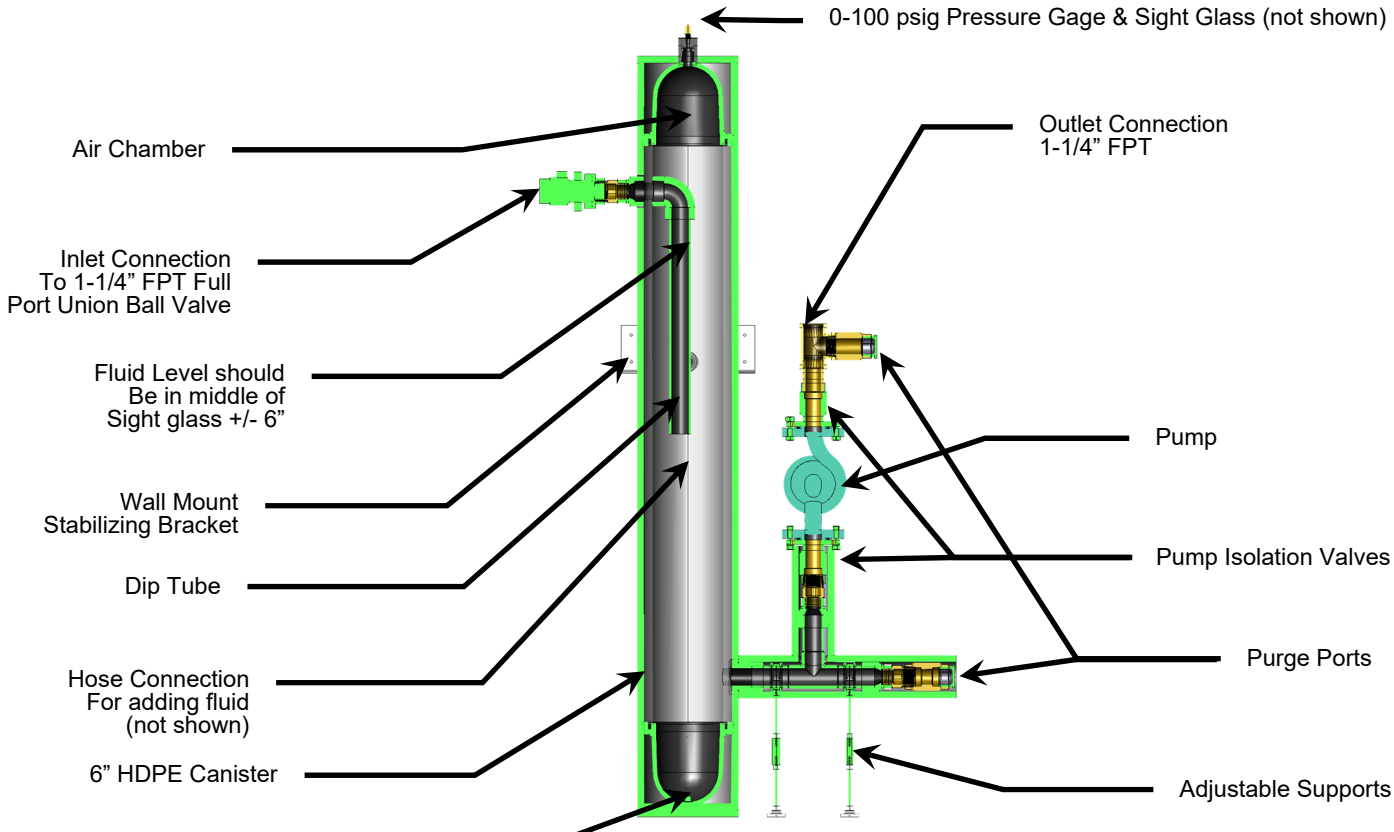

Section View

GX6AHB-11 Submittal

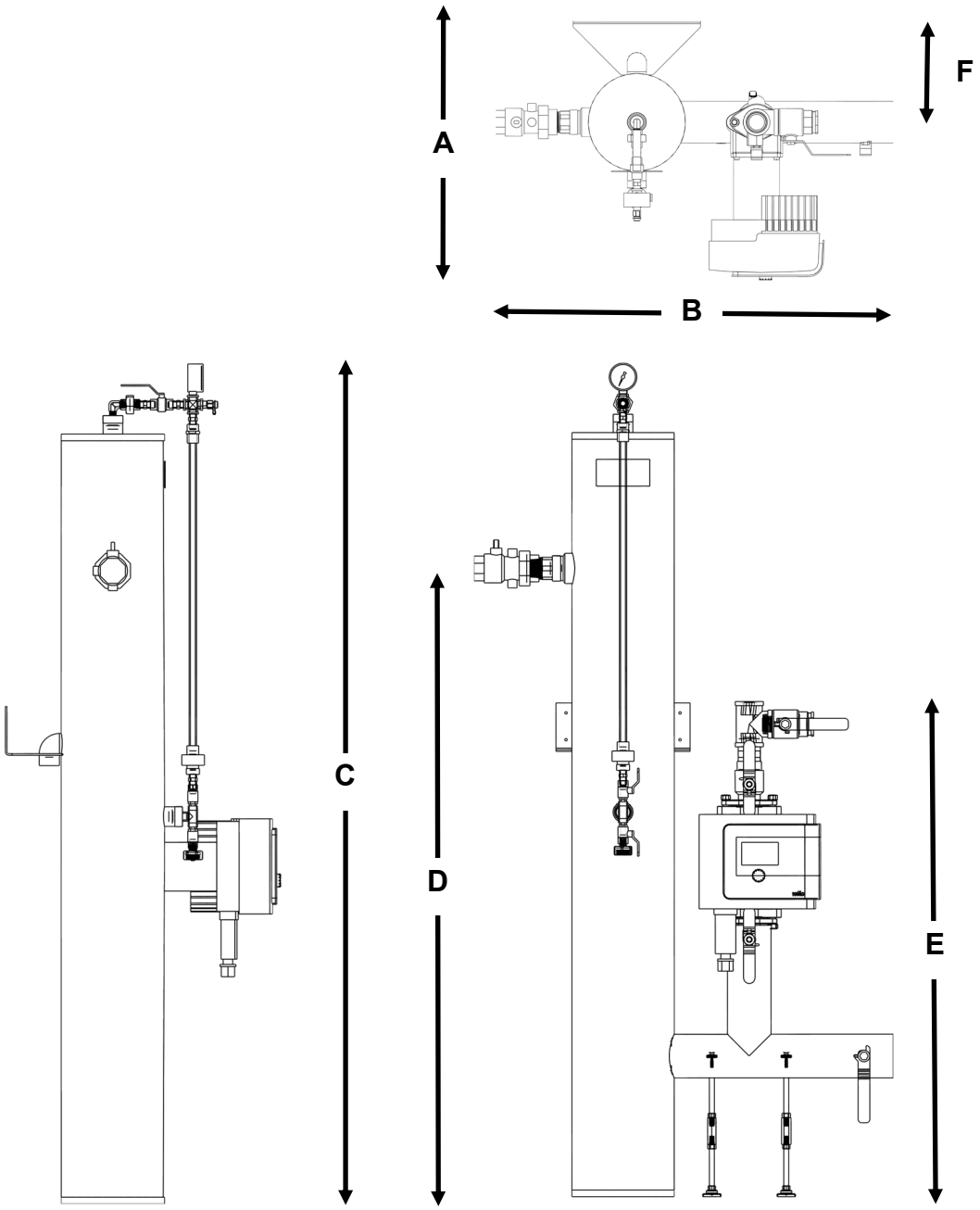

		ft - in	mm
A	Depth	1' 8 1/4"	515
B	Width	2' 7 1/4"	794
C	Height	5' 0 1/8"	1579
D	Inlet Height	3' 10 7/8"	1190
E	Outlet Height	3' 1"	939
F	Centerline from wall	0' 7 7/8"	202
	Inlet Connection	1-1/4" FPT	
	Outlet Connection	1-1/4" FPT	
	Purge Port Connection	1-1/4" FPT	

Submittal Data Sheet

High-Efficiency Smart Circulators

Wilo-Stratos MAXO

		Project:					
		Engineer:					
		Contractor:					
		Submitted By:			Date:		
		Approved By:			Date:		
Tag #	**Model #**	**Flow**	**Head**	**Control Mode**	**Cycle**	**Phase**	**Voltage**
	Maxo 1.25x3-52				60Hz	1~	230-240V

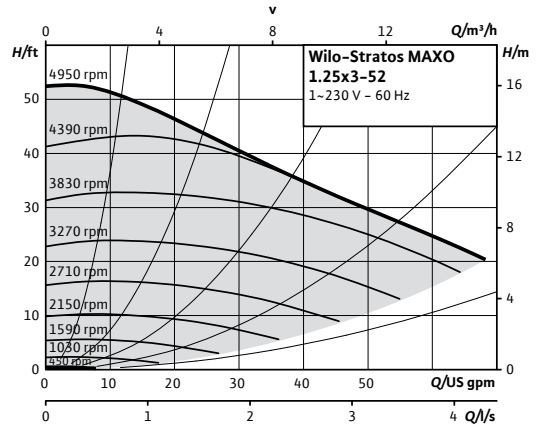

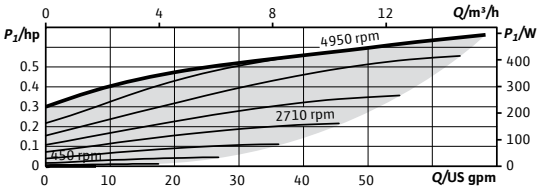

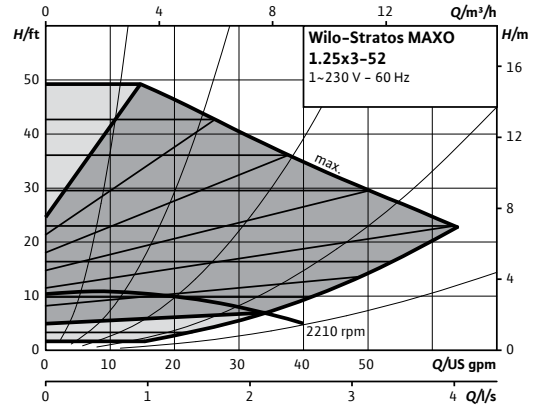

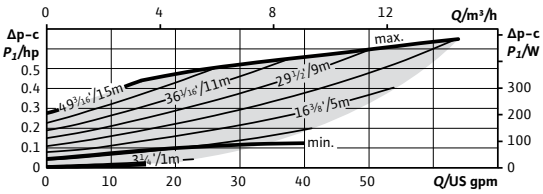

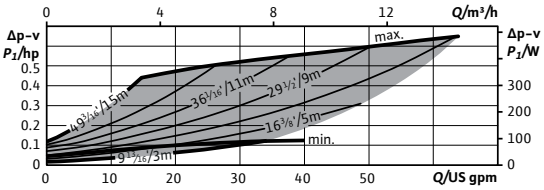

Product Info

Brand	Wilo
Product Description	Stratos MAXO 1.25x3-52
Article Number	2164611
Net Weight (approx.)	34 lbs

Hydraulic Data

Max Operating Pressure PN	145 PSI
Min. Suction Head (122°F)	7.1 PSI
Min. Suction Head (203°F)	17.1 PSI
Min. Suction Head (230°F)	25.6 PSI
Min. Fluid Temp.	14°F
Max Fluid Temp.	230°F
Min. Ambient Temp	14°F
Max. Ambient Temp	104°F

CIF Module Selection

BACnet MS/TP	☐
Modbus RTU	☐
CANopen	☐
LON TP/FT-10	☐
PLR	☐

Accessory Selection

Immersion Temp. Sensor Pt 1000 AA	☐
Immersion Sleeve G ½", 45mm	☐
Pipe Surface Contact Sensor PT 1000 B	☐
Immersion Sleeve G ½", 100mm	☐

Dia.	1 ¼"
ØD	4 ¾"
Ød	2 ⅞"
Øk	3 ½"
n x d_L	2 x ½"

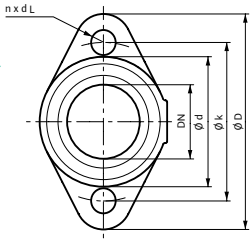

Materials

Pump Housing	EN-GJL-250
Impeller	PPS-GF40
Shaft	X30Cr13
Bearing	Carbon, antimony-impregnated

Motor Data

Mains Connection	1~230-240 V ±10%, 50/60Hz
Motor Type	ECM
Rated Power P_2	0.582 hp
Min. Speed n_{min}	450 RPM
Max. Speed n_{max}	4950 RPM
Power Consumption $P_{1\,max}$	0.664 hp
Power Consumption $P_{1\,min}$	0.013 hp
Max Current (1~230V) I_{max}	2.21 A
Min Current (1~230V) I_{min}	0.2 A
Insulation Class	F
Protection Class	Enclosure 2

Electrical Inputs

Analog Inputs (2x)	0-10V / 0-20mA / 4-20mA / PT 1000 Passive/Active +24V DC
Digital Inputs (2x)	Ext Off / Ext Min / Ext Max / Ext. MANUAL (BMS off) / External Key Lock / Switch heating, cooling
Wilo NET	Multi-Pump Communication
SSM	Fault Signal
SBM	Run Signal

Installation Dimensions

Pipe Connection (discharge)	1 ¼"
Pipe Connection (suction)	1 ¼"
Flange to Flange	8 ½"

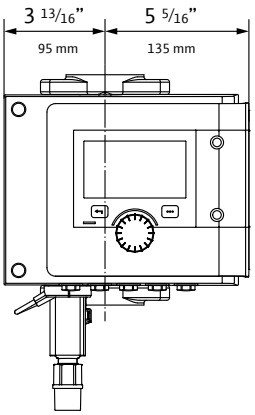

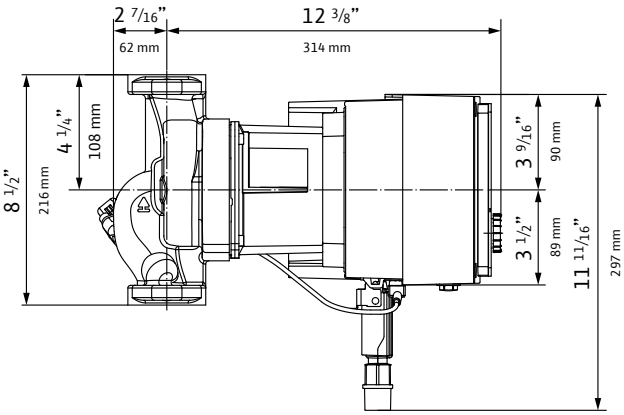

WILO USA LLC
+1 262 204-6600
www.wilo-usa.com
info.us@wilo.com

WILO Canada Inc.
+1 403 276-9456
www.wilo-canada.com
info@wilo-canada.com

WILO Mexico
+52 442 167 00 32
www.wilo-mexico.com
info@wilo.com.mx