# GX8AEB-22 Submittal

The GX series of flow centers operates like and with all the benefits of a non-pressurized flow center with added features, including the ability to operate at pressures up to 100 psig. Designed for use in multiple heat pump geothermal applications, properly installed, the GX is self-regulated, using the minimum power necessary for supplying the optimal flow rate to each running heat pump (regardless of size or proximity to flow center). Using the WILO MAXO Pump the GX captures the benefits of state-of-the-art ECM variable speed pump technology.

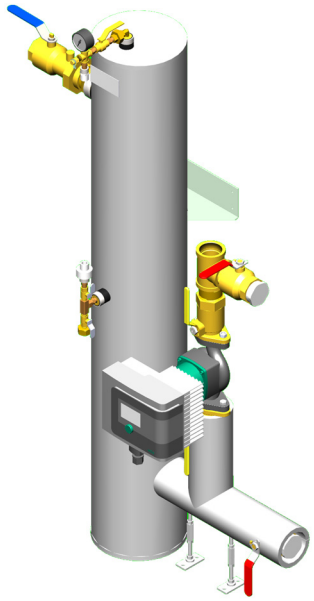

**GX8AEB-22**

## Features:

- Electronically Commutated Motor (ECM) Variable Speed Pump Technology
- Lowest Energy Consumption per Ton of Heat Pump Capacity
- Available in 4 Configurations:
  - Basic - Single Pump
  - Dual - Two Pumps in Parallel (either Full or Partial Redundancy)
  - Primary/Secondary - Two Pumps (Primary for Loop Field & Secondary for Heat Pumps)
  - Dual Primary/Secondary - Four Pumps (Two Primary & Two Secondary)
- Non-Pressurized but capable of being pressurized Flow Center
- Sealed High-Density Polyethylene Insulated Canister
- Air Separation Chamber
- 0-100 psig pressure gauge
- Sight Glass to indicate proper fill level
- FPT Brass or Flanged Inlet & Outlet Connections
- Stabilizing Wall Mounting Bracket
- Purge Ports and hose bib connection for Easy Fill & Maintenance
- GV Zone Monitor (GVZM) Accessory, a cost-effective way to further reduce energy consumption by disabling pump when no heat pumps are running
- Engineering Support for system design
- 3 Year Limited Warranty

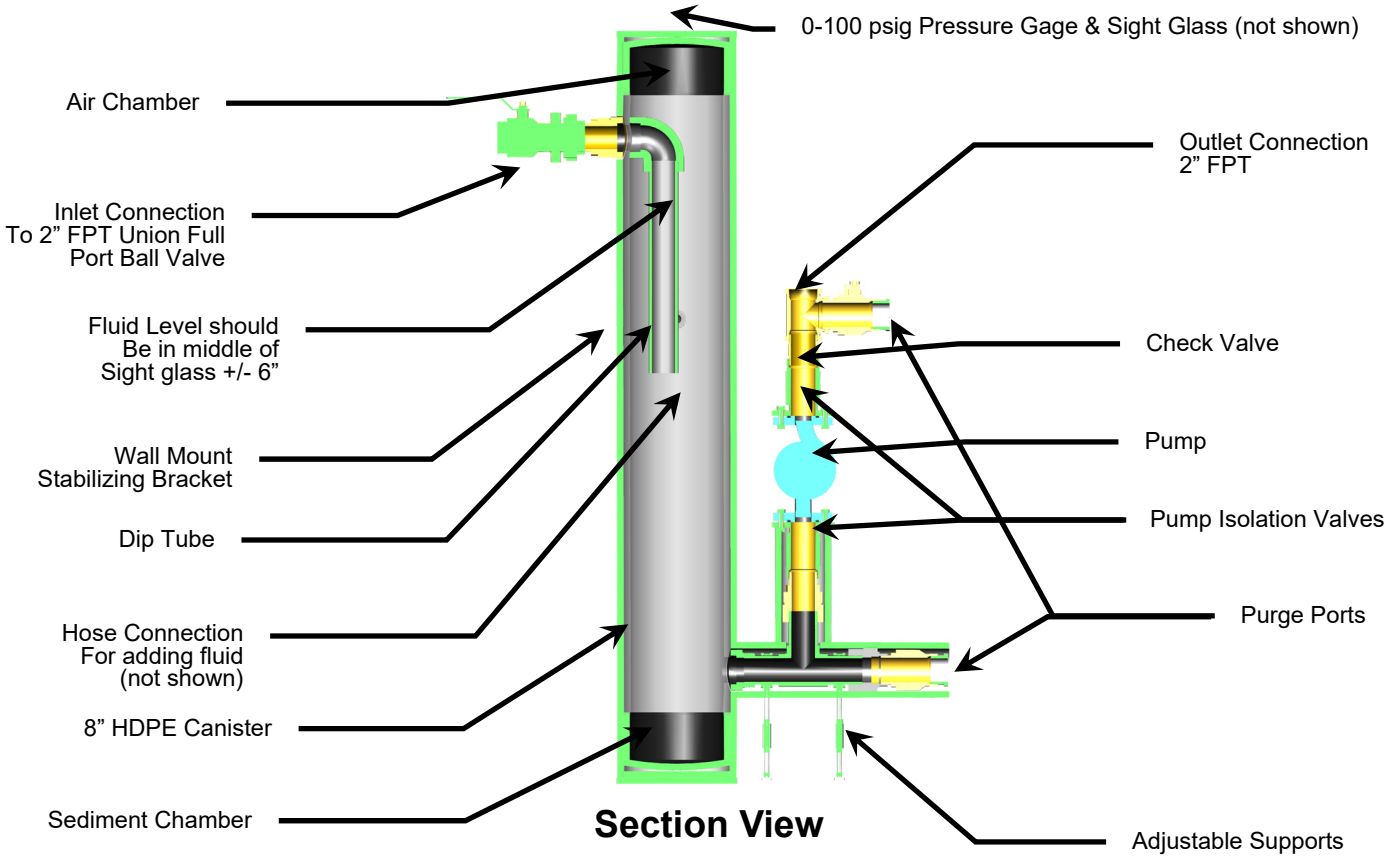


**Section View**

# GX8AEB-22 Submittal

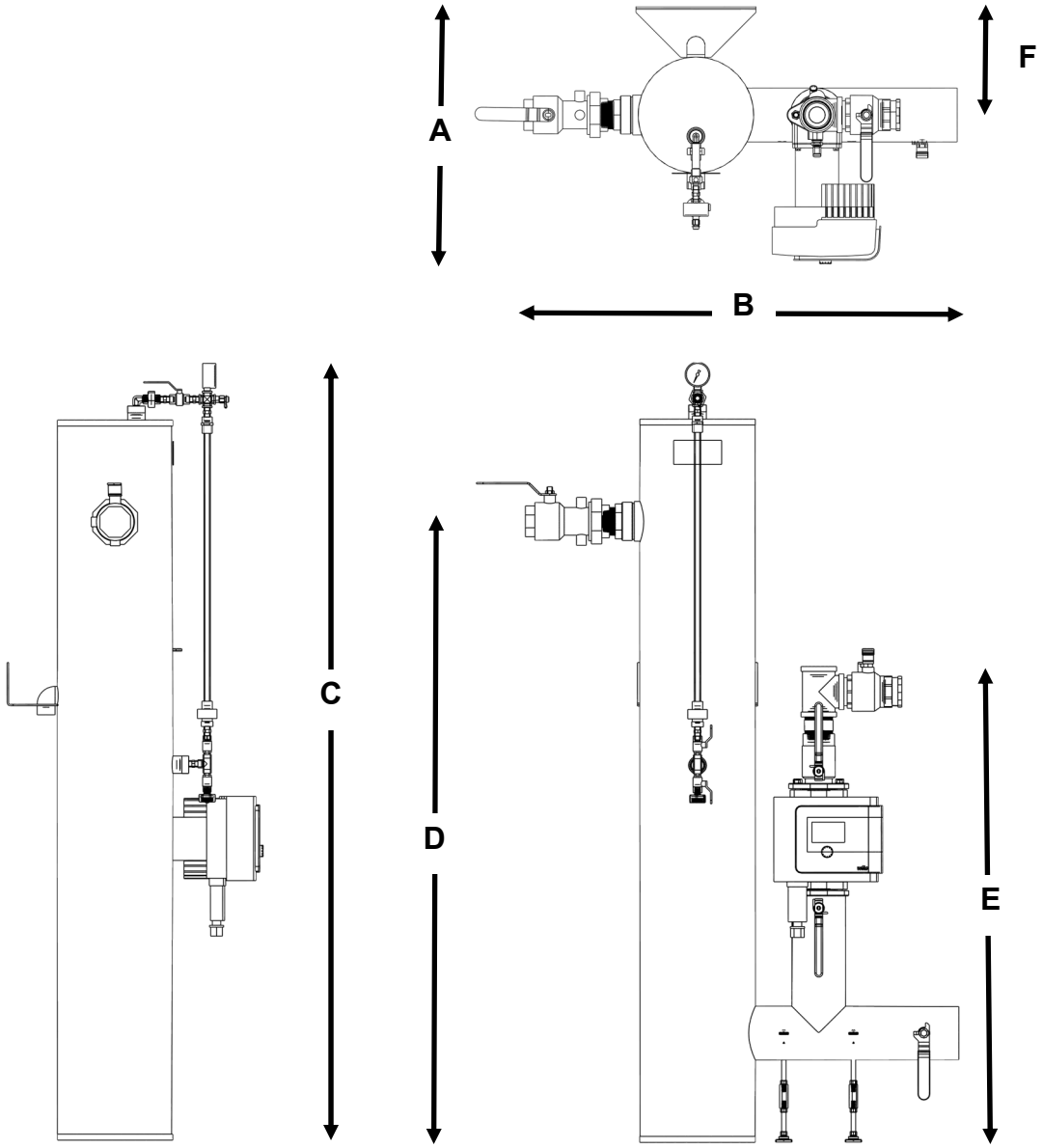


| | | ft - in | mm |
|---|---|---|---|
| **A** | Depth | 1' 9 1/4" | 540 |
| **B** | Width | 3' 1/8" | 917 |
| **C** | Height | 5' 5" | 1651 |
| **D** | Inlet Height | 4' 3 3/4" | 1314 |
| **E** | Outlet Height | 3' 3 5/8" | 1007 |
| **F** | Centerline from wall | 0' 8 7/8" | 226 |
| | Inlet Connection | 2" FPT | |
| | Outlet Connection | 2" FPT | |
| | Purge Port Connection | 2" FPT | |

# Submittal Data Sheet

High-Efficiency Smart Circulators

## Wilo-Stratos MAXO

| | |
|---|---|
| Project: | |
| Engineer: | |
| Contractor: | |
| Submitted By: | Date: |
| Approved By: | Date: |

| Tag # | Model # | Flow | Head | Control Mode | Cycle | Phase | Voltage |
|---|---|---|---|---|---|---|---|
| | Maxo 1.25x3-35 | | | | 60Hz | 1~ | 115/230-240V |

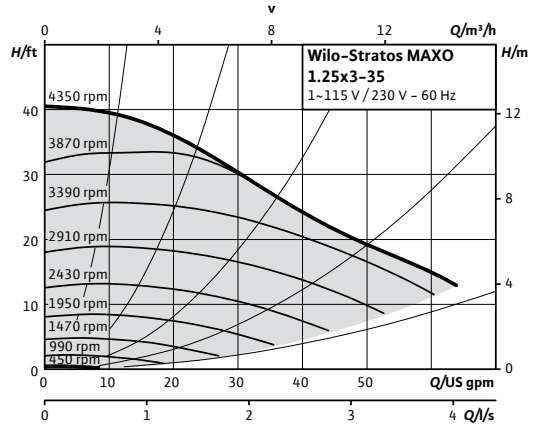


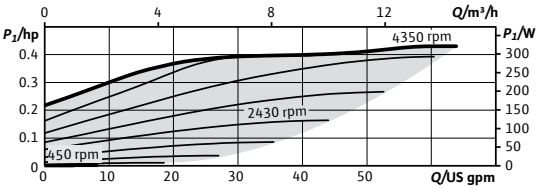


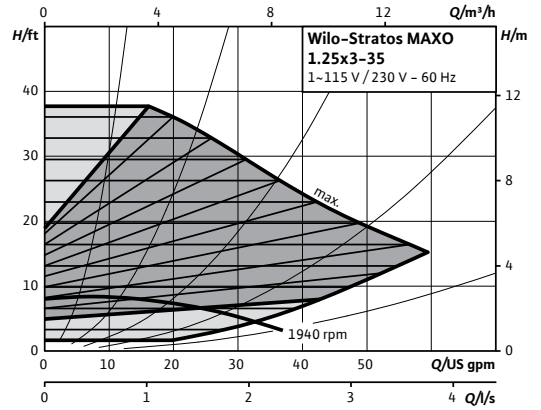


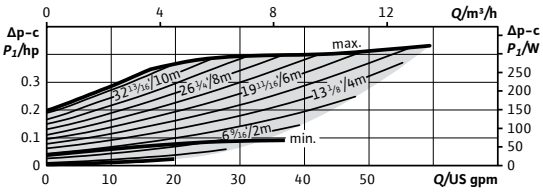


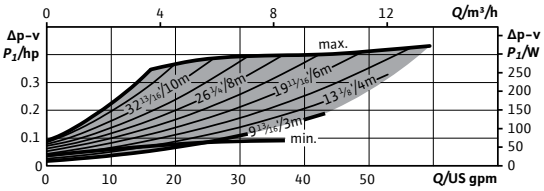


### Product Info

| | |
|---|---|
| Brand | Wilo |
| Product Description | Stratos MAXO 1.25x3-35 |
| Article Number | 2164610 |
| Net Weight (approx.) | 34 lbs |

### Hydraulic Data

| | |
|---|---|
| Max Operating Pressure PN | 145 PSI |
| Min. Suction Head (122°F) | 4.3 PSI |
| Min. Suction Head (203°F) | 14.2 PSI |
| Min. Suction Head (230°F) | 22.8 PSI |
| Min. Fluid Temp. | 14°F |
| Max Fluid Temp. | 230°F |
| Min. Ambient Temp | 14°F |
| Max. Ambient Temp | 104°F |

### CIF Module Selection

| | |
|---|---|
| BACnet MS/TP | ☐ |
| Modbus RTU | ☐ |
| CANopen | ☐ |
| LON TP/FT-10 | ☐ |
| PLR | ☐ |

### Accessory Selection

| | |
|---|---|
| Immersion Temp. Sensor Pt 1000 AA | ☐ |
| Immersion Sleeve G ½", 45mm | ☐ |
| Pipe Surface Contact Sensor PT 1000 B | ☐ |
| Immersion Sleeve G ½", 100mm | ☐ |

| | |
|---|---|
| Dia. | 1 ¼" |
| ØD | 4 ¾" |
| Ød | 2 7/8" |
| Øk | 3 ½" |
| n x $d_L$ | 2 x ½" |

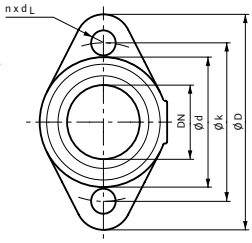


### Materials

| | |
|---|---|
| Pump Housing | EN-GJL-250 |
| Impeller | PPS-GF40 |
| Shaft | X30Cr13 |
| Bearing | Carbon, antimony-impregnated |

### Motor Data

| | |
|---|---|
| Mains Connection | 1~115V ±10%, 50/60Hz<br>1~230-240V ±10%, 50/60Hz |
| Motor Type | ECM |
| Rated Power $P_2$ | 0.354 hp |
| Min. Speed $n_{min}$ | 450 RPM |
| Max. Speed $n_{max}$ | 4350 RPM |
| Power Consumption $P_{1\,max}$ | 0.433 hp |
| Power Consumption $P_{1\,min}$ | 0.013 hp |
| Max Current (1~230V) $I_{max}$ | 1.38 A |
| Min Current (1~230V) $I_{min}$ | 0.15 A |
| Max Current (1~115V) $I_{max}$ | 2.83 A |
| Min Current (1~115V) $I_{min}$ | 0.15 A |
| Insulation Class | F |
| Protection Class | Enclosure 2 |

### Electrical Inputs

| | |
|---|---|
| Analog Inputs (2x) | 0-10V / 0-20mA / 4-20mA /PT 1000 Passive/Active +24V DC |
| Digital Inputs (2x) | Ext Off / Ext Min / Ext Max / Ext. MANUAL (BMS off) / External Key Lock / Switch heating, cooling |
| Wilo NET | Multi-Pump Communication |
| SSM | Fault Signal |
| SBM | Run Signal |

### Installation Dimensions

| | |
|---|---|
| Pipe Connection (discharge) | 1 ¼" |
| Pipe Connection (suction) | 1 ¼" |
| Flange to Flange | 8 ½" |

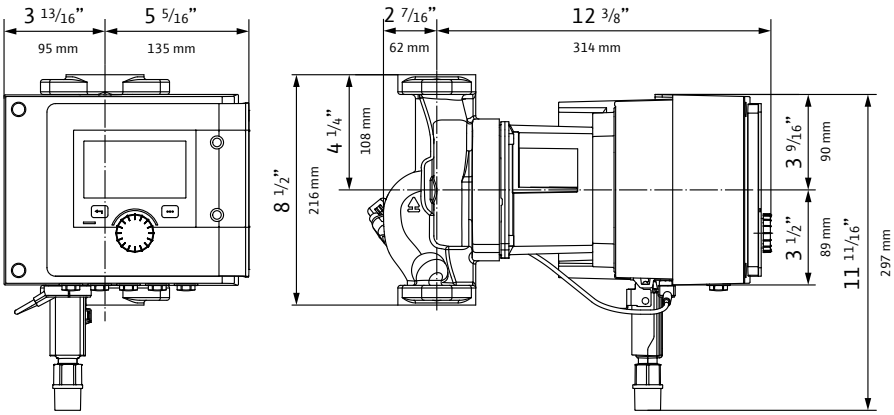



WILO USA LLC
+1 262 204-6600
www.wilo-usa.com
info.us@wilo.com

WILO Canada Inc.
+1 403 276-9456
www.wilo-canada.com
info@wilo-canada.com

WILO Mexico
+52 442 167 00 32
www.wilo-mexico.com
info@wilo.com.mx